MAKIINA Dual Arm

Unbox → Assemble → Clamp → Connect → Power On

LEFT and RIGHT mean the robot's own left and right.
Dashed lines show where a cable is hidden behind another cable or a part.

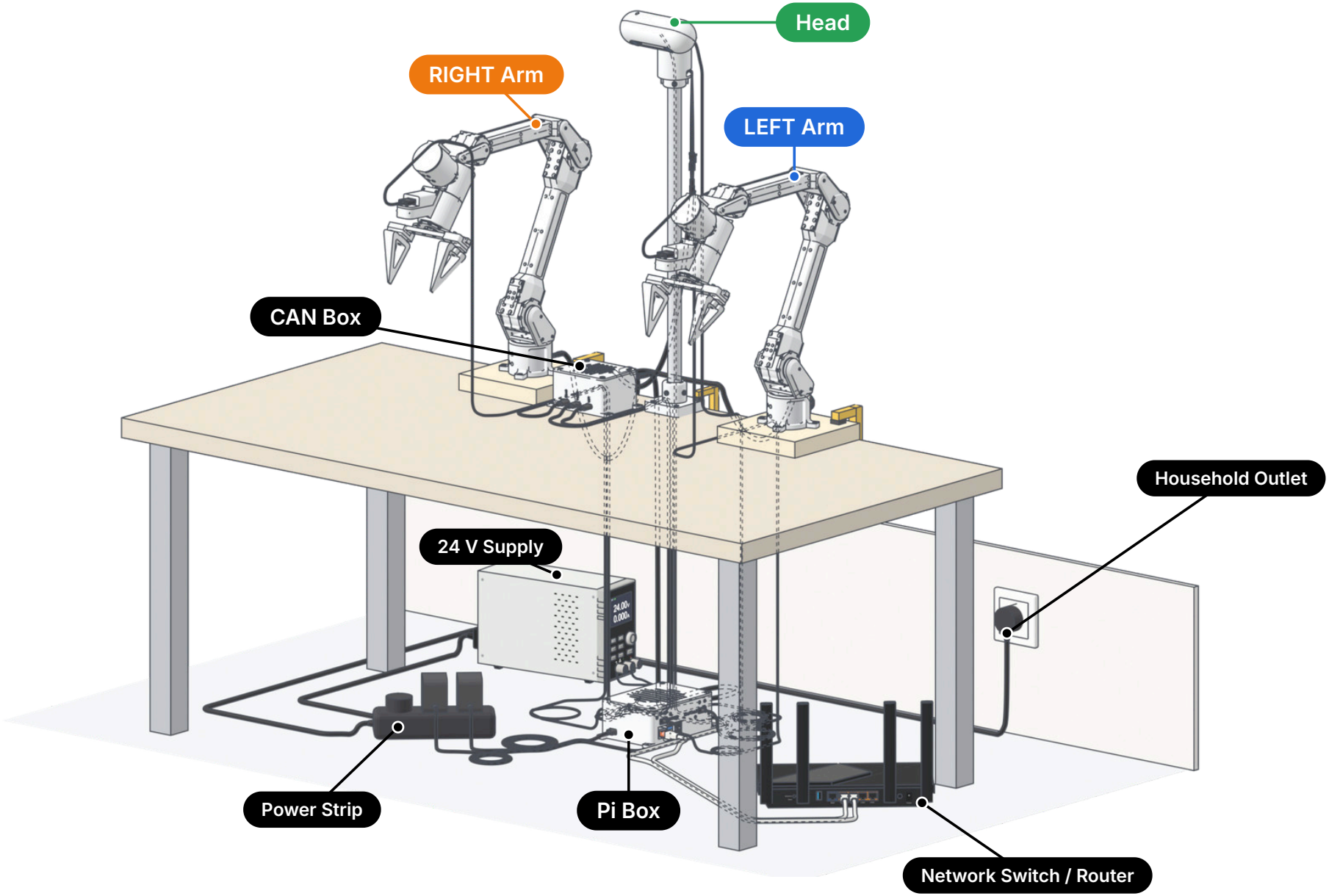

In the Box

MAKIINA

2x

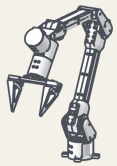

6-DoF Arm
(Left + Right)

2x

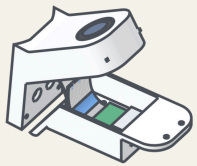

Gripper Camera
(Ships Open, Ribbon In)

1x

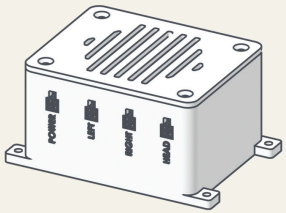

CAN Box

1x

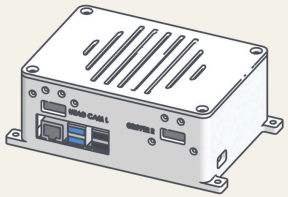

Pi Box

1x



Head: Capsule + Neck
(Assembled, Screws In)

1x



Rod

1x

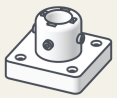

Head Base
(Screws In)

3x



Extension Cables, 0.5 m
(Arms, Head)

1x



Extension Cable, 1 m
(Power)

1x



PSU Pigtail
(Red + Black, Tinned)

3x



USB-A ↔
USB-C, 1 m

4x



HDMI, 2 m
(Cameras)

2x



USB-C Power
Supply (Pis)

8x



M3x6 CS

8x



M2x6

8x

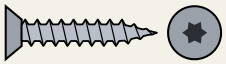

Wood 3.5x20 Torx

Screws are drawn 1:1 (real size) when printed on A4.

You Also Need (Not Included)

1x



24 V / 6 A
Power Supply

2x

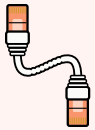

Ethernet
Cable

1x



Network
Switch / Router

2x

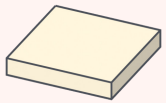

Board 15 x 15 cm
≥ 25 mm Thick

5x



Clamps: 4 + 1
Smaller (Head)

1x

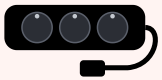

Power Strip
(3 Sockets)

1x



Hex 1.5 / 2 / 3 mm
+ Torx T15

Connectors: Male ♂ and Female ♀

MAKIINA

Every 24 V and CAN cable (arms, head, 24 V supply) uses the same 4-pin Micro-Fit connector. It has two halves. A male always goes into a female.

♂ Male: Pins

Micro-Fit 43020-0400

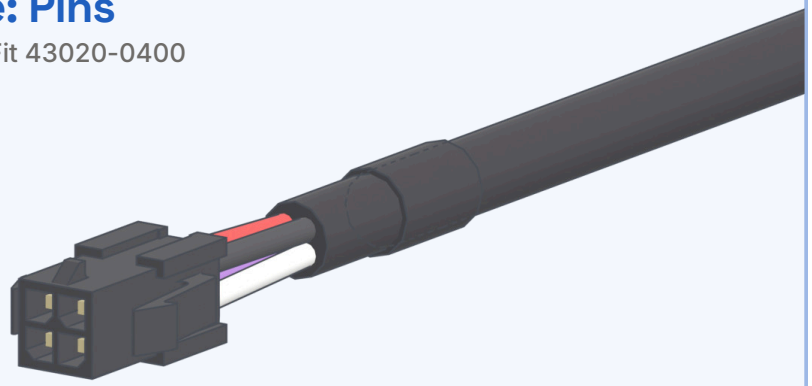

From the back, with the latch up, the wires are black · red over white · purple.

Where You Find It:

- Inside Each CAN Box Outlet (4 Pins)
- One End of Every Extension Cable

♀ Female: Sockets

Micro-Fit 43025-0400

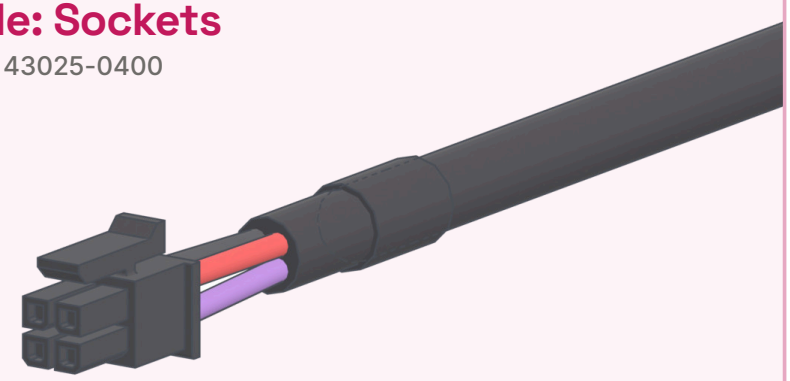

From the back, with the latch up, the wires are red · black over purple · white.

Where You Find It:

- The End of the Cable on Each Arm and the Head
- The Other End of Every Extension Cable · The PSU Pigtail

The ♀ housing slides into the ♂ housing. Inside, the ♂ pins go into the ♀ sockets.

What Plugs into What

CAN Box Outlet ♂

CAN Box POWER ♂

Extension Cable, 0.5 m



Extension Cable, 1 m



Arm / Head Cable ♀

PSU Pigtail → 24 V Supply



♀

The Rule

♂ goes into ♀.

Cables plug into the CAN box and the 24 V supply's pigtail. They also plug into the short cable on each arm and head.

Plug or unplug them only with the 24 V supply OFF.

1 Assemble the Head

MAKIINA

1x Head: Capsule + Neck, 4 Screws In

1x 50 cm Rod

1x Head Base, 4 Screws In

Keep the Head Cable Outside the Rod

It comes out of the cable slot.
Let it hang down beside the rod.

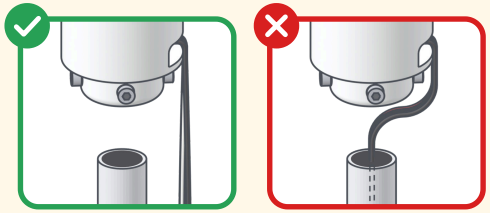

1

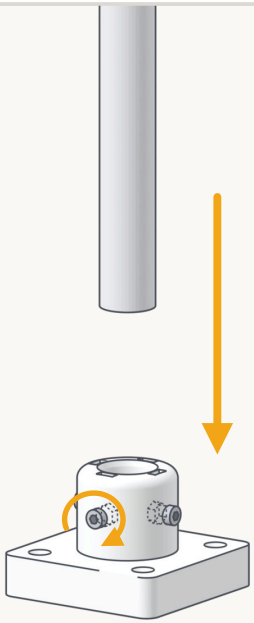

Push the rod in, all the way down.
Then tighten the 4 screws,
snug (hex 3 mm).

2

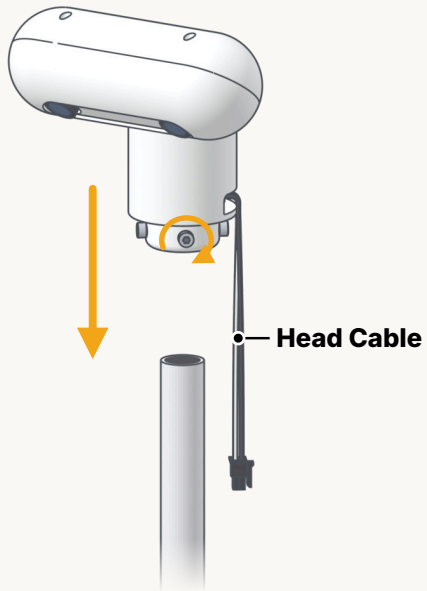

Slide the head onto the rod,
down to the stop.
Keep its cable outside the rod.
Tighten the neck's 4 screws, snug.

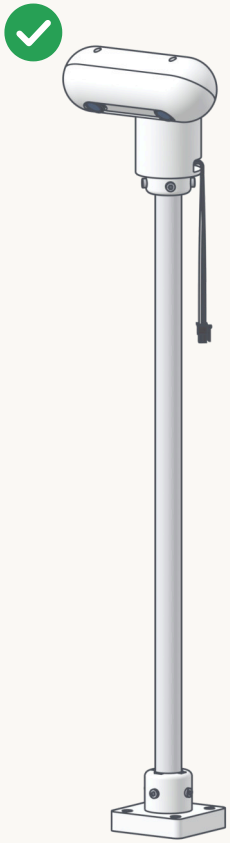

The Head's Two Cameras

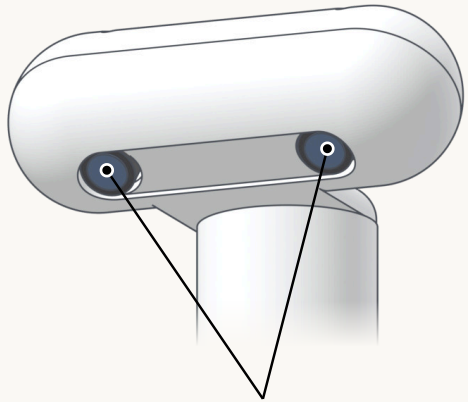

2x Camera Lens (IMX708)

They look forward and down,
at the arms. Keep them clean.
Do not open the capsule.

Head turned by hand, or not fully assembled?
Calibrate it in the Robot Console (step 17).

It ships as a rod, a base and a head (capsule + neck). The screws and nuts are already in. Just tighten them. The cameras face the arms.

2 Fit the Gripper Cameras

MAKIINA

1x	4x	4x
		
Gripper Camera (As Shipped)	M3x6 CS	M2x6

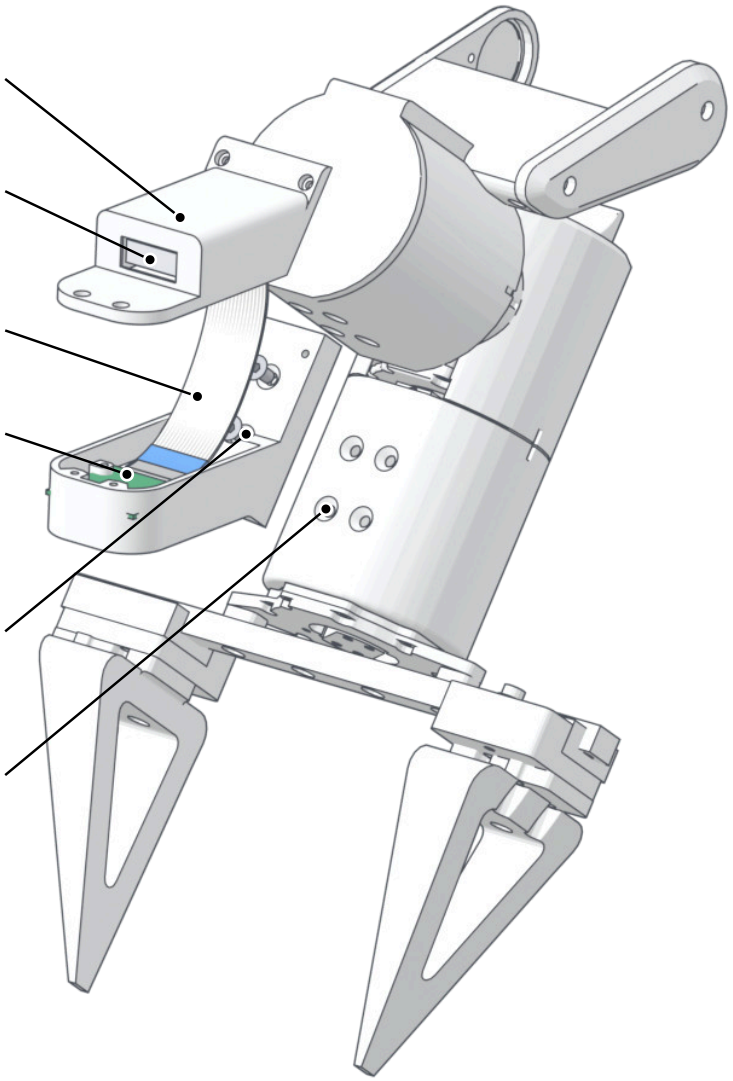

1. **Screw the base onto the gripper.**
   Lens faces the jaws. Use 4x M3x6 CS, snug.
2. **Fold the white ribbon in.**
   Tuck it into the base. Do not pinch it.
3. **Close the housing.**
   Put the back part on. Use 4x M2x6, snug.

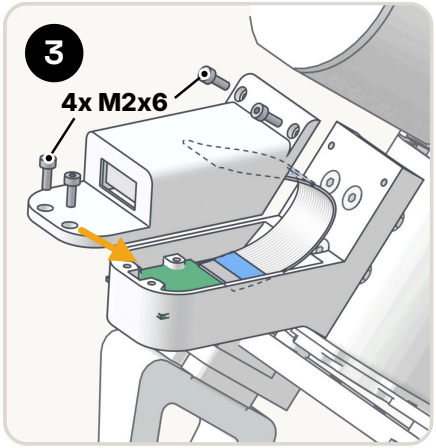

x2

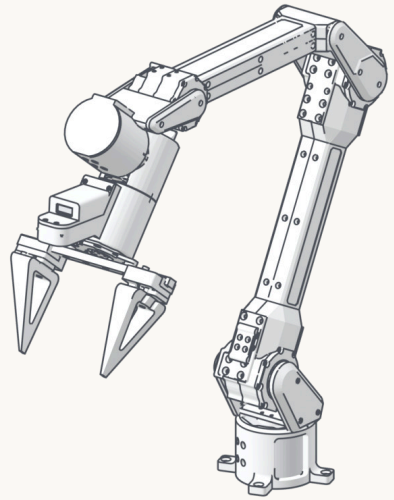

Both Arms

It ships open. The camera is in the base. The HDMI board is in the back part. The ribbon joins them. Leave them in.

3 Screw the Arms to Their Boards

MAKIINA

1x	4x
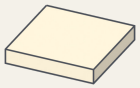	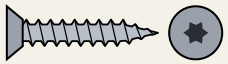
Board 15 x 15 cm	Wood Screw 3.5x20 Torx

Screw each arm onto its own board.

You clamp the board, never the arm.

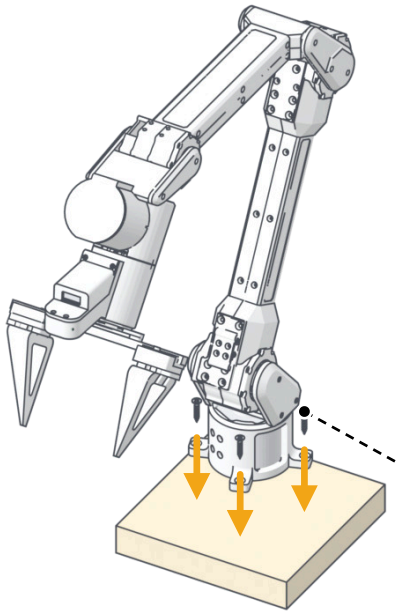

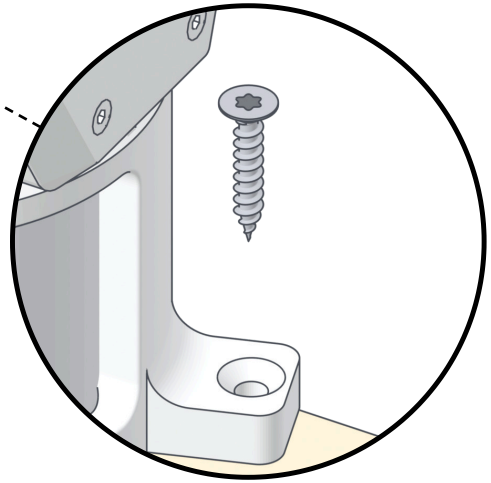

4x Wood Screw 3.5x20 Torx

One per Base Tab (4th Tab at the Back)

x2

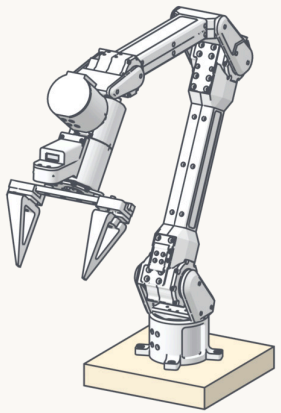

Both Arms

Use a flat, stiff board, 15 x 15 cm, at least 25 mm thick (screw length + 5 mm).
Use the Torx T15. In hardwood, pre-drill the holes. Drive the screws straight. The base must sit flat.

4 Plan the Table

MAKIINA

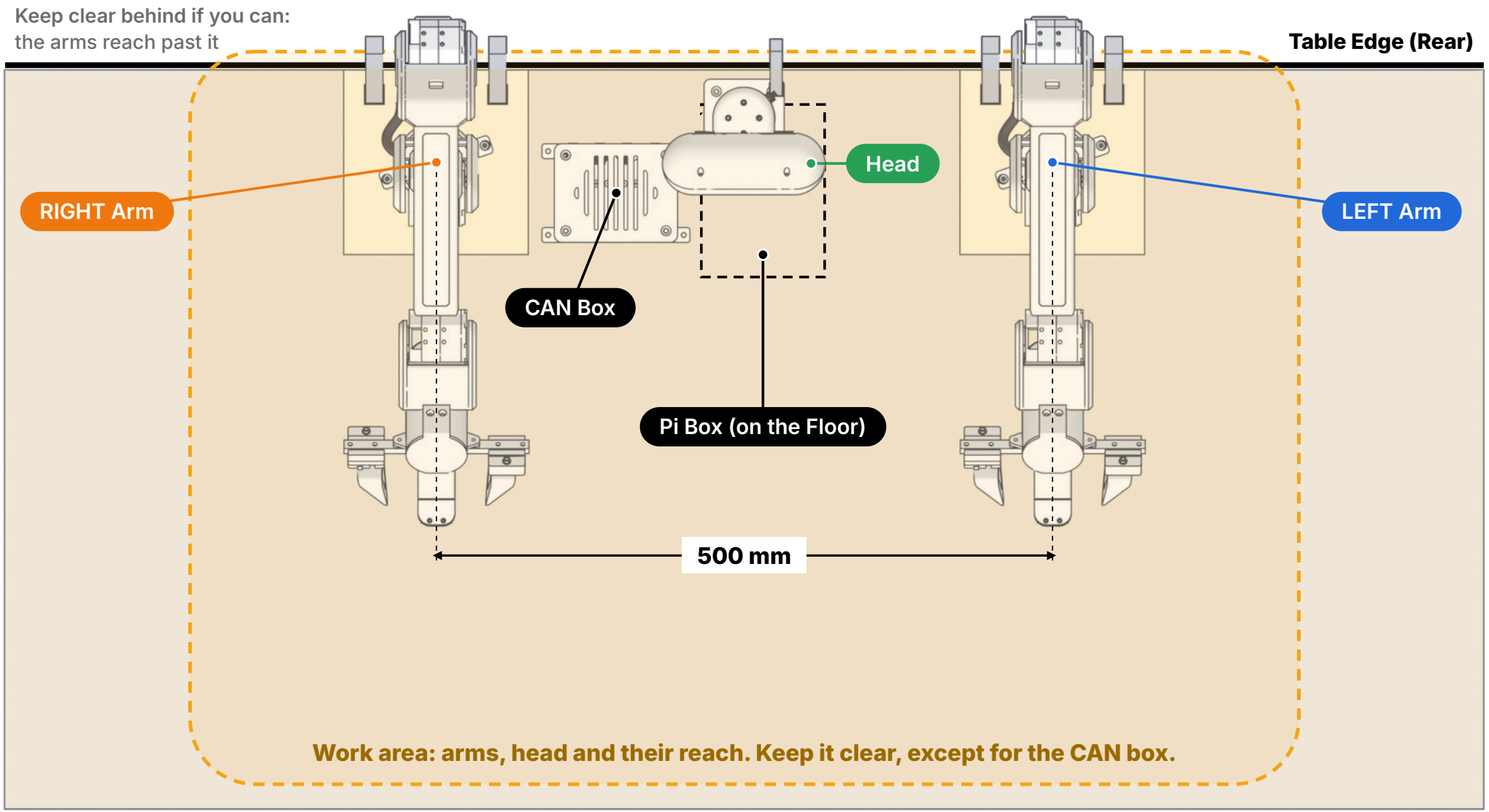

Top view. The boards go on the rear edge. The head goes midway between the arms. The head cameras face the arms.
The CAN box goes at the rear edge, between the head and the RIGHT arm. The Pi box goes on the floor under the table, below the head.

5 Clamp the Boards and the Head

MAKIINA

5x



Clamp

Clamp each board to the table edge.

Never clamp the arm.

Clamps not included.

Keep the arm's cable clear of the clamps.

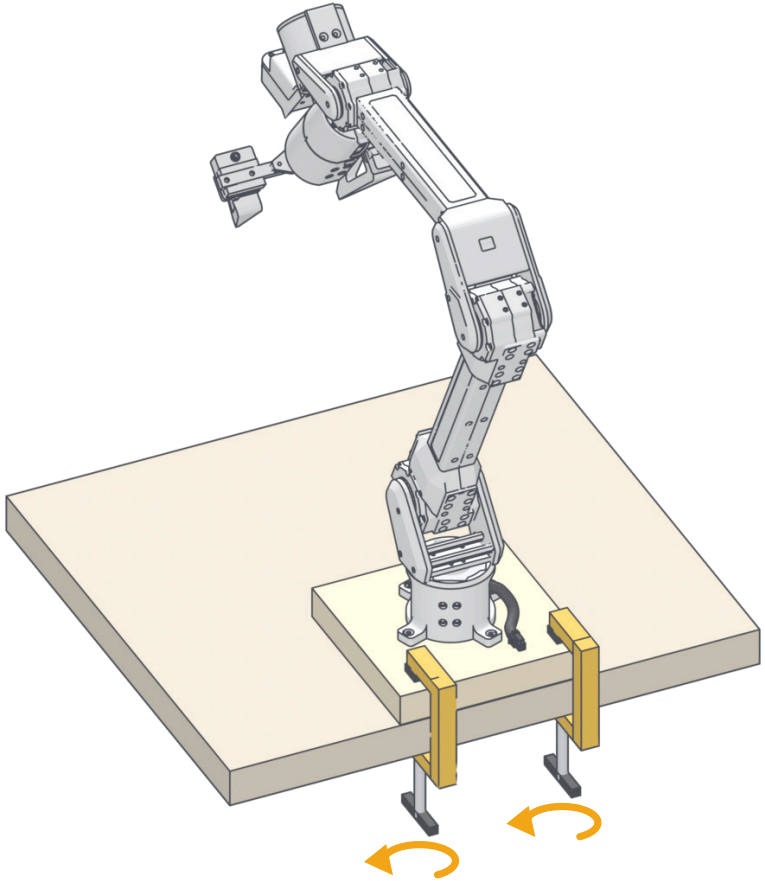

2 Clamps per Board

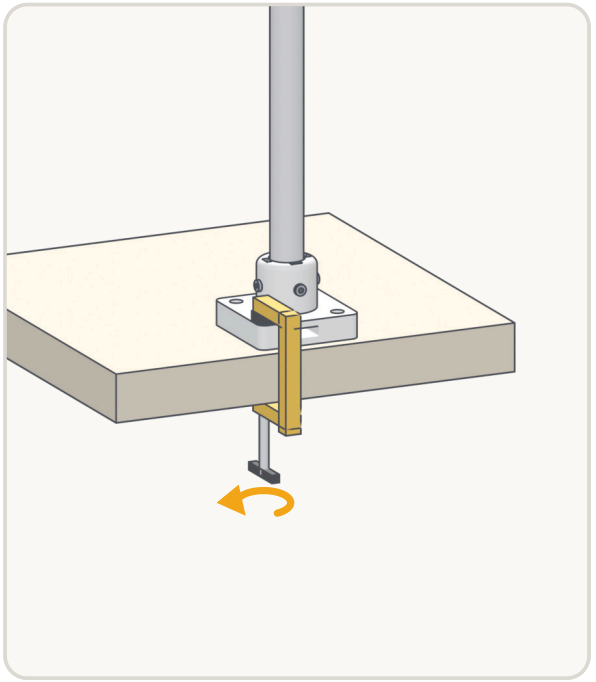

Head Base: 1 Smaller Clamp

⚠ **Boards and head base must not shift when the arms move.**

6 Place the Boxes

Seen from the front, on the RIGHT arm's side.

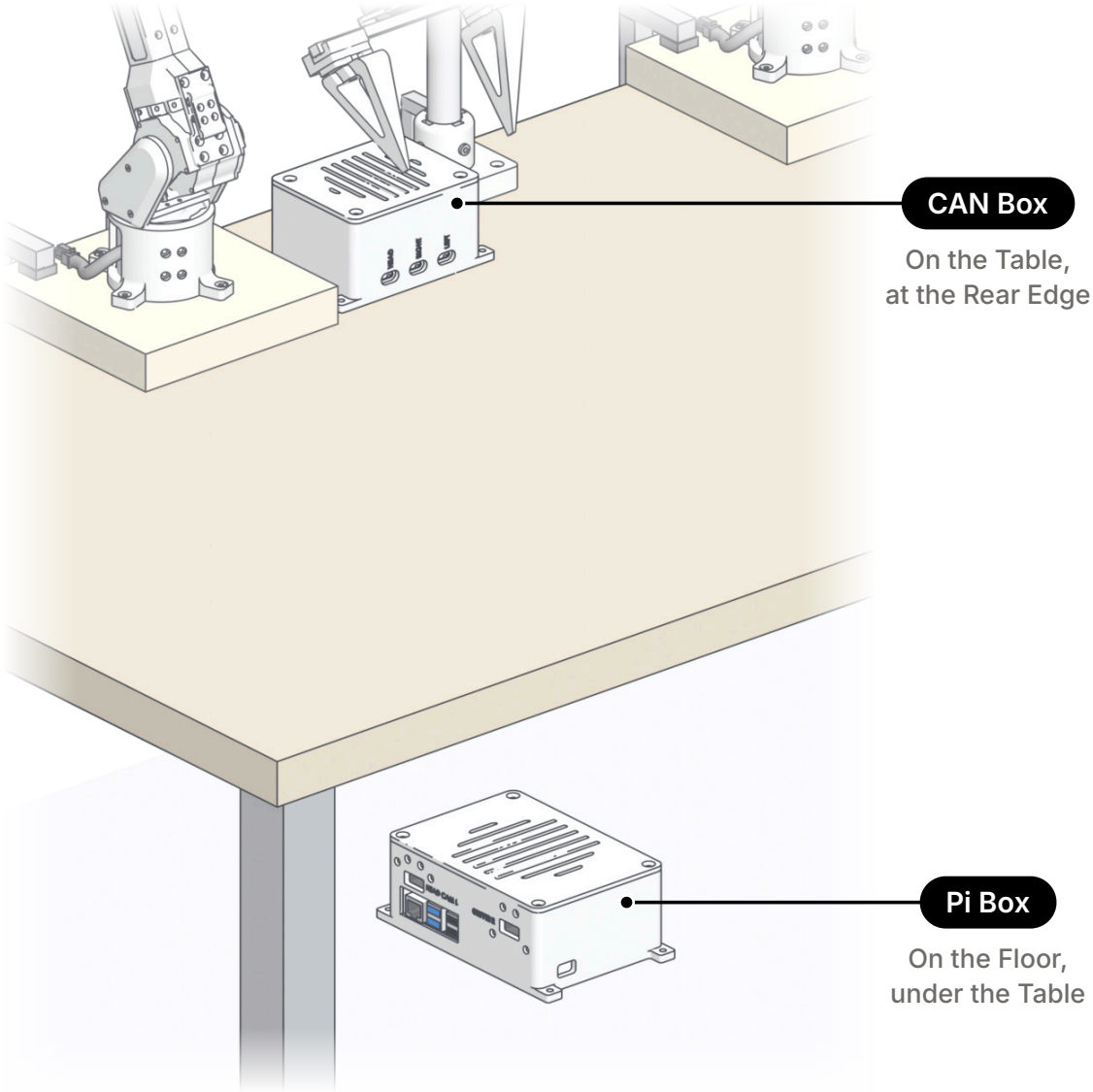

Put the CAN box on the table, at the rear edge, between the head and the RIGHT arm.
Put the Pi box on the floor under the table, below the head. Turn it so its USB ports face the RIGHT arm's side.

7 Connect the Left Arm

Seen from behind the robot: its left arm is on the left here.

MAKIINA

1x



♀ CAN Box — Extension Cable, 0.5 m — ♂ Arm

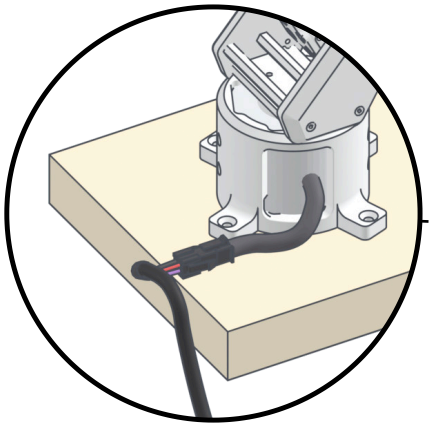

♂ Cable into ♀ Arm Cable

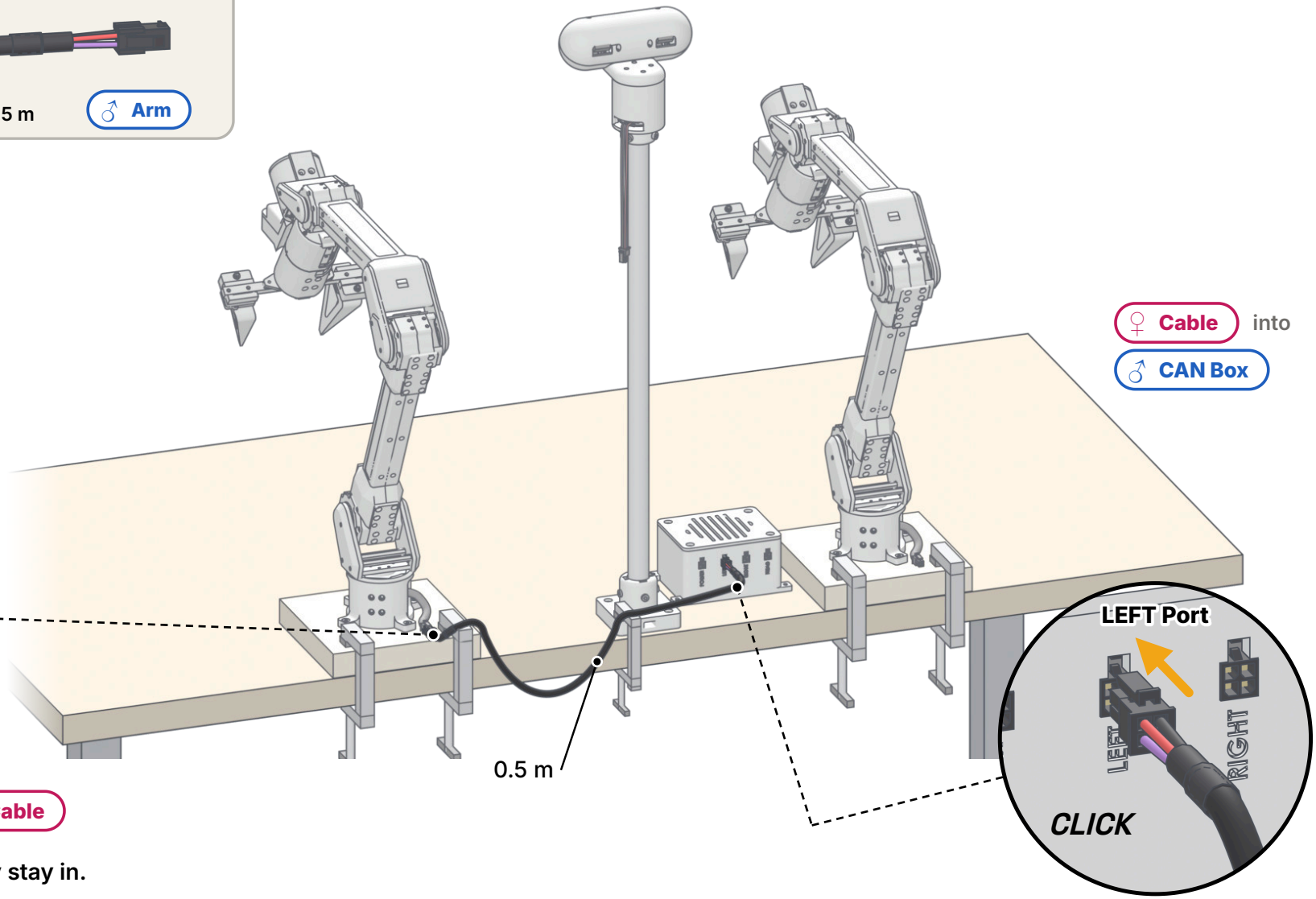

✓ Tug gently at both ends: they stay in.

Extension cable: ♀ end → CAN box port LEFT (♂). ♂ end → the left arm's own cable, out of the right side of its base. Push until it clicks.

8 Connect the Right Arm

MAKIINA

Seen from behind the robot: its left arm is on the left here.

1x



♀ CAN Box — Extension Cable, 0.5 m — ♂ Arm

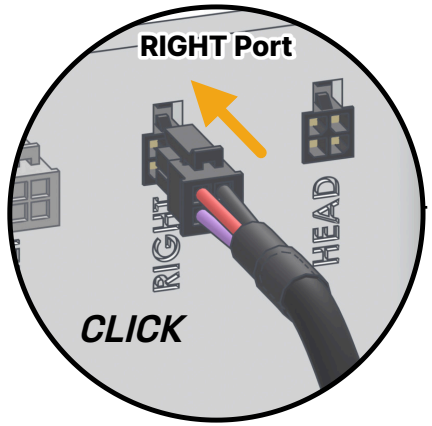

♀ Cable into ♂ CAN Box

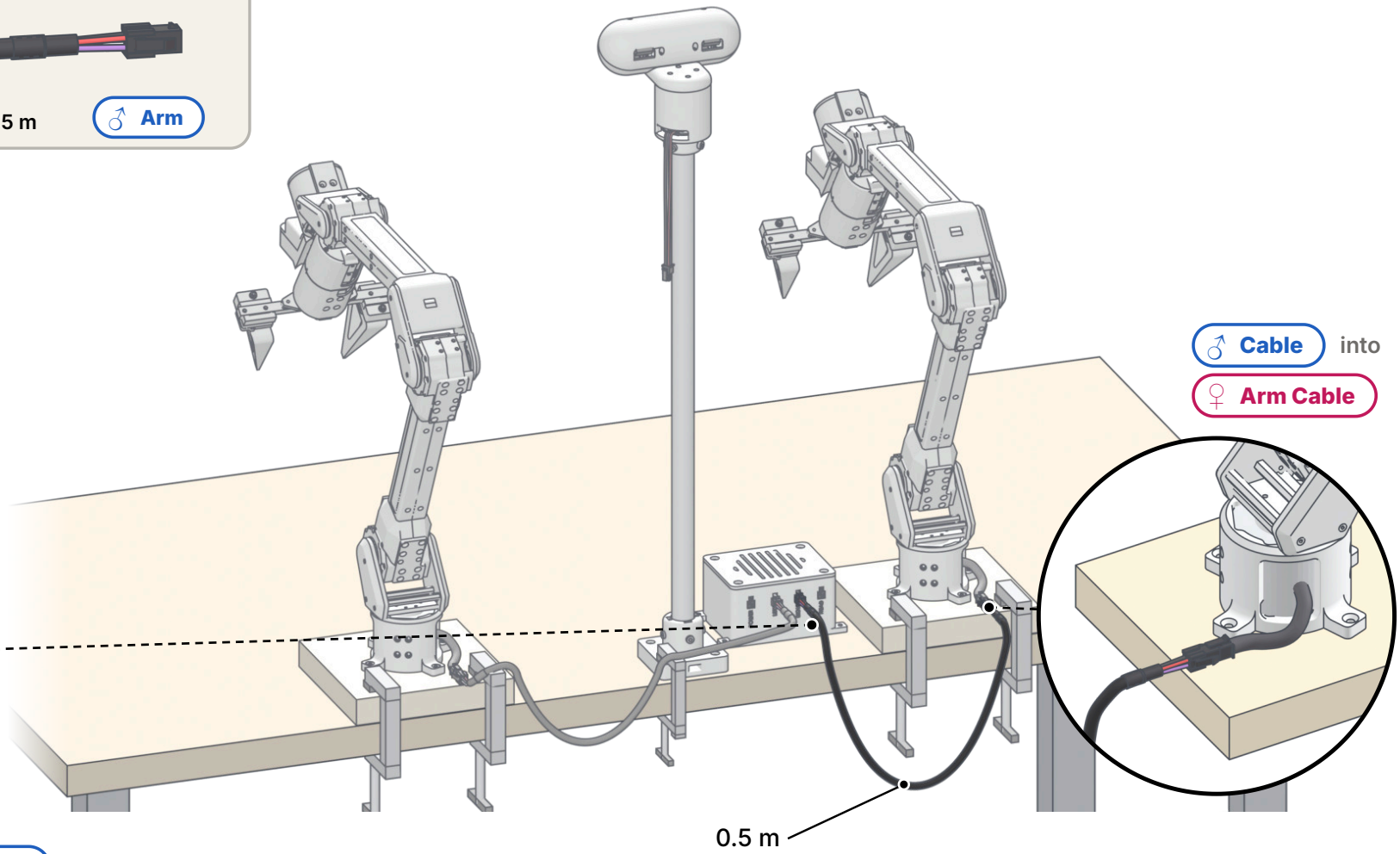

♂ Cable into ♀ Arm Cable

✅ Tug gently at both ends: they stay in.

Extension cable: ♀ end → CAN box port RIGHT (♂). ♂ end → the right arm's own cable, out of the right side of its base. Push until it clicks.

9 Connect the Head

MAKIINA

Seen from behind the robot: its left arm is on the left here.

1x



♀ CAN Box — Extension Cable, 0.5 m — ♂ Head

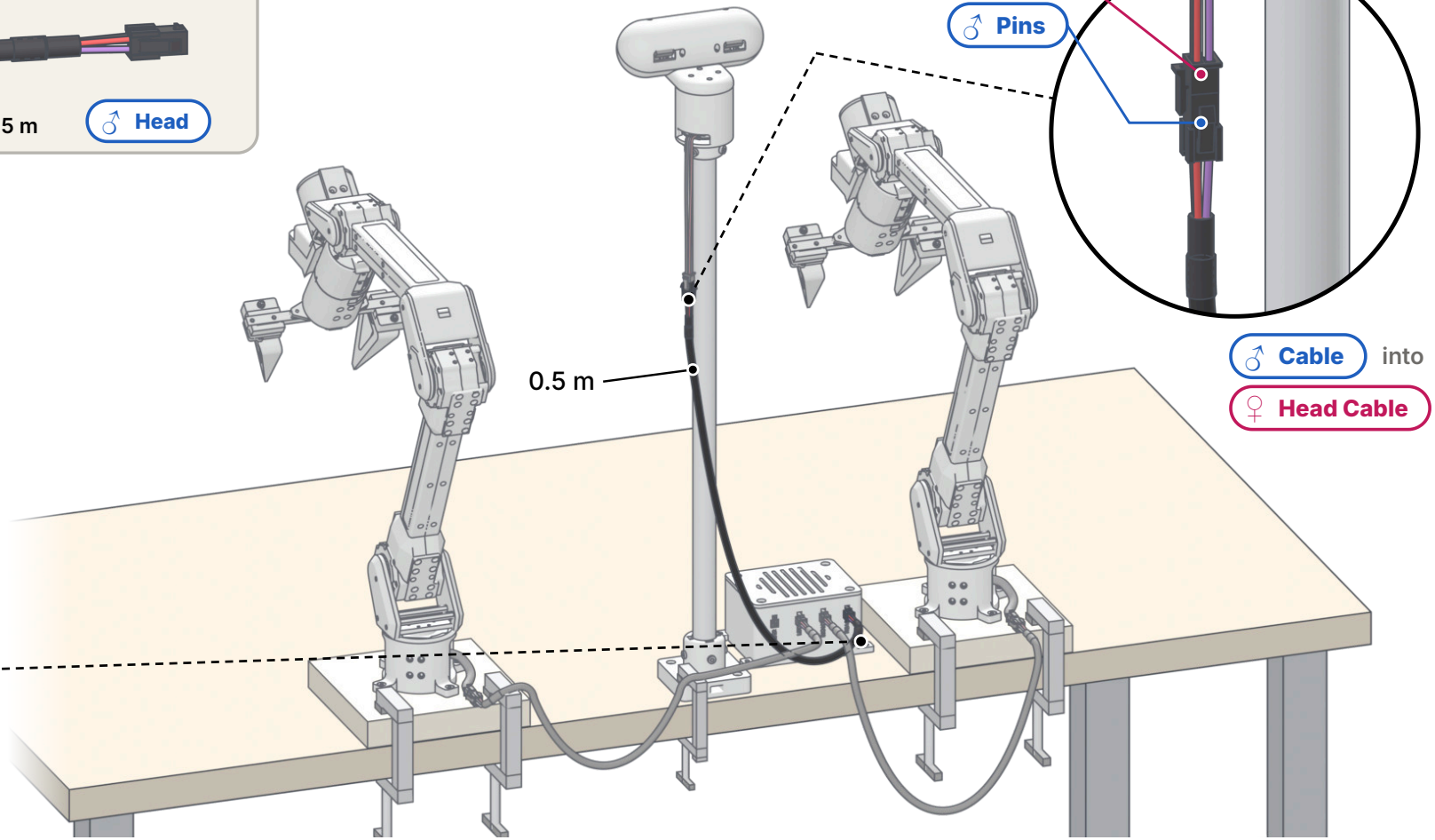

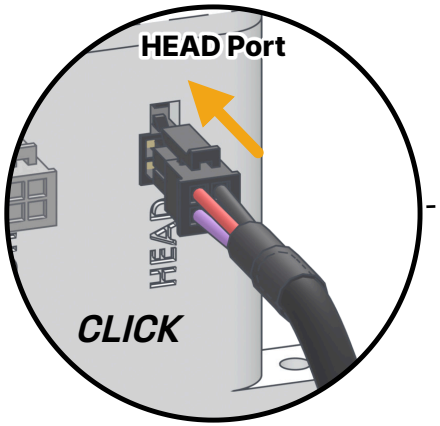

♀ Cable into ♂ CAN Box

✅ Tug gently at both ends: they stay in.

Extension cable: ♀ end → CAN box port HEAD (♂). ♂ end → the head's own cable, out of the neck's cable slot. Push until it clicks.

10

STEP 10 OF 21

Link the CAN Box to the Pi Box

MAKIINA

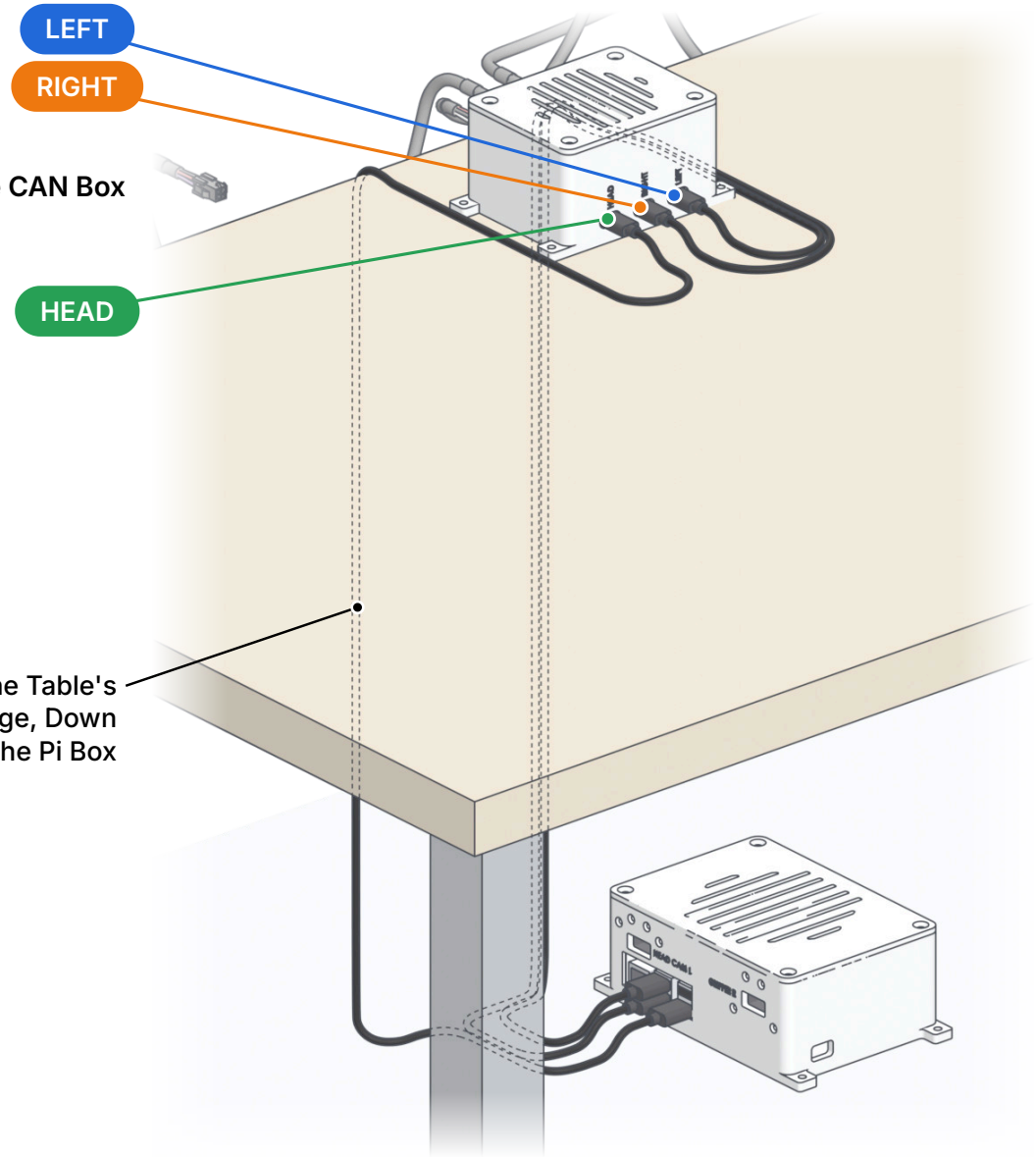

3x



USB-A ↔ USB-C, 1 m

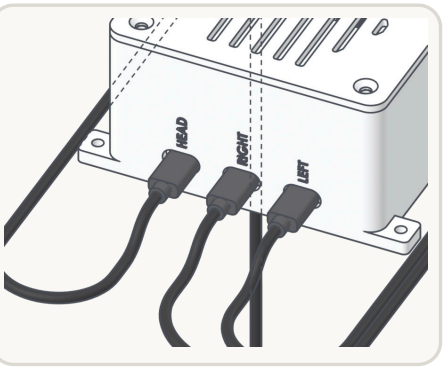

USB-C into the CAN Box

USB-A → HEAD Pi
Wall with HEAD CAM L / GRIPPER R
LEFT, RIGHT: Blue USB 3
HEAD: Black USB 2

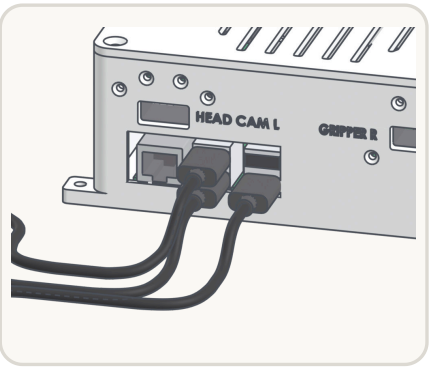

USB-A into the HEAD Pi

Plug USB-C into the CAN box and USB-A into the HEAD Pi. LEFT and RIGHT go into the blue USB 3 ports. HEAD goes into a black USB 2 port. Run each cable round the CAN box, over the table's rear edge and down to the Pi box on the floor.

11

STEP 11 OF 21

Connect the Cameras

MAKIINA

4x



HDMI, 2 m

Cables are not marked.
Plug in at the camera first.
Then follow the cable to
the port with the same name.

Gripper cables:
Plug in with the wide side
toward the camera. Run them
back over the wrist, down
beside the arm, over the table's rear edge and down.

Head cables:
Plug in at 45°. Run them down
beside the rod, over the rear edge.

At the Pi box:
Push each plug in all the way.
Its black part goes into the box.
Coil the spare on the floor.

Plug or unplug HDMI only
while the Pis are off.

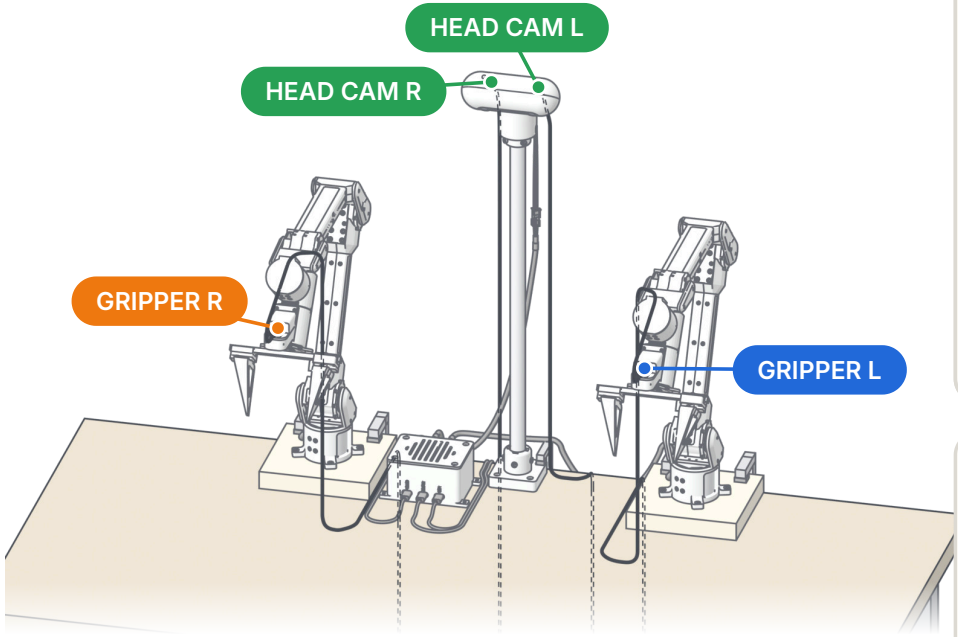

Head: Back, 45° Plugs

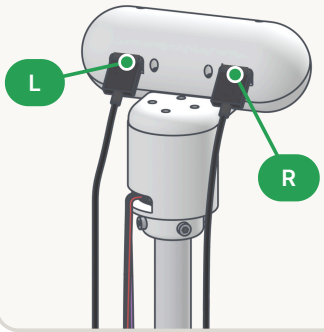

Gripper: Back Part, Angled

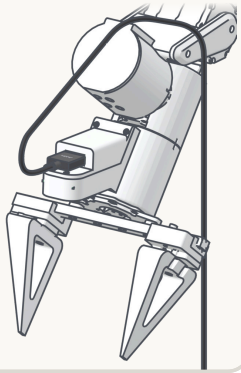

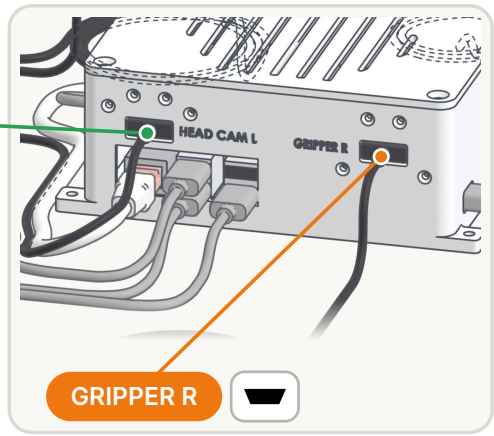

Wall with the USB Ports

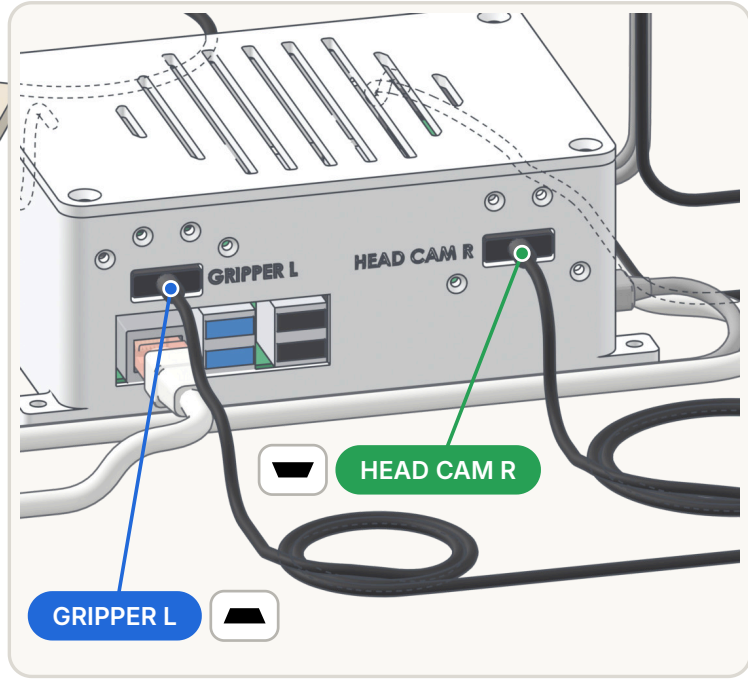

Pi Box: Plug Side Up

HDMI Up (L Ports) HDMI Down (R Ports)

Connect each camera to the Pi box port with the same name. L and R mean the robot's own left and right.

12

STEP 12 OF 21

Connect the Network

MAKIINA

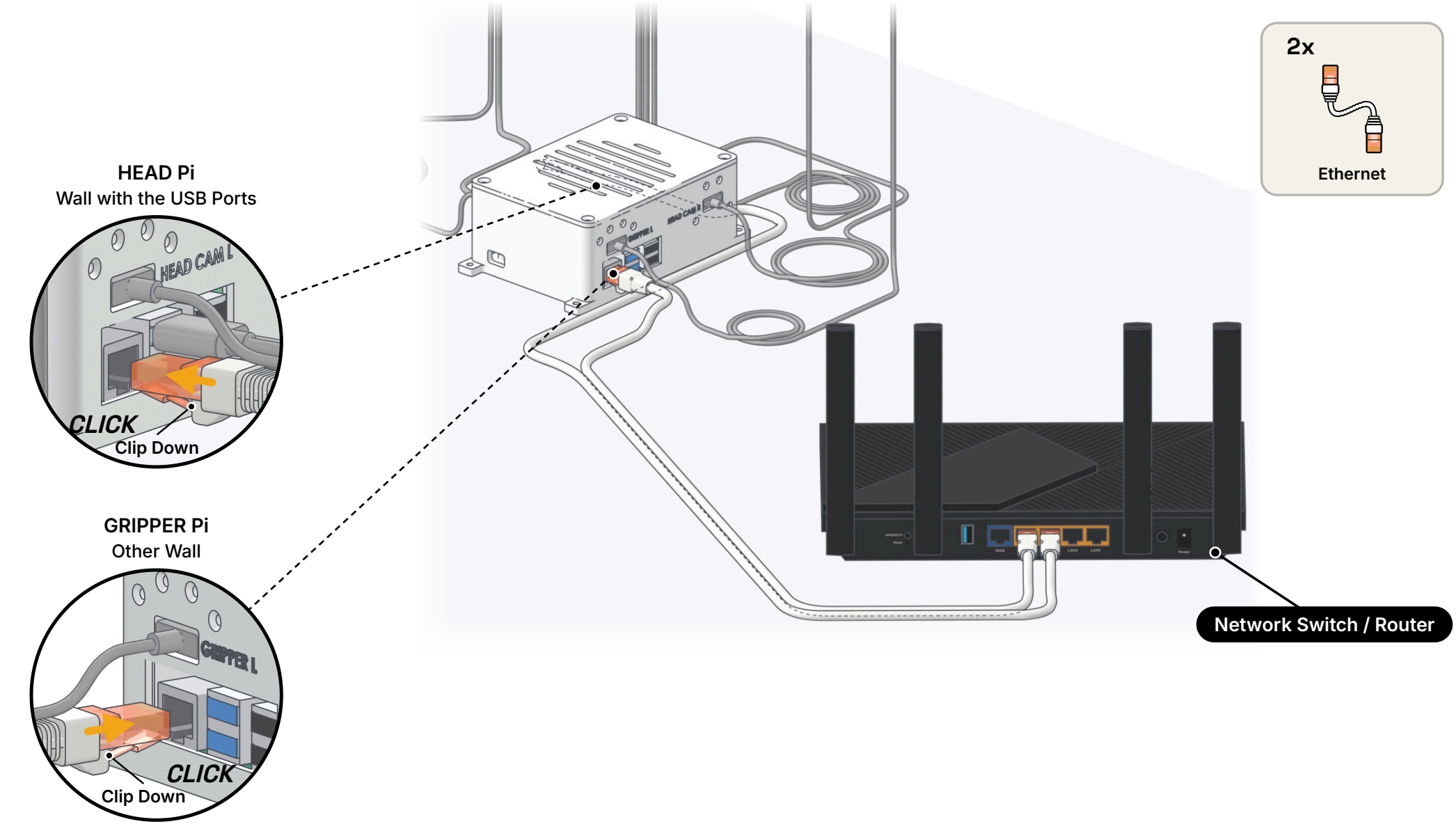

Each Pi needs its own Ethernet cable. Push the plug in, clip down, until it clicks.
Plug the other ends into LAN ports on your router or switch, not the Internet (WAN) port.

13 Connect 24 V Power

MAKIINA

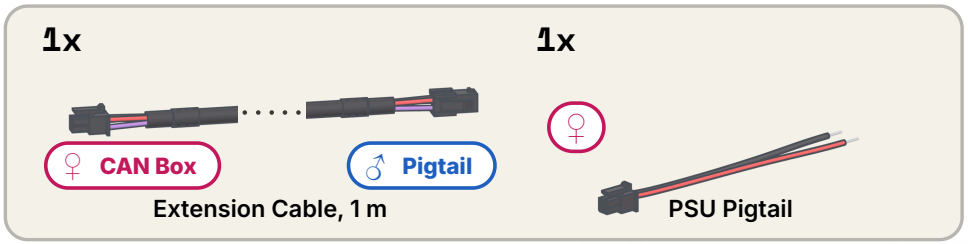



OFF

First, with nothing connected:
Switch the supply on at the back.
Set 24.0 V and 6.0 A.
Keep On/Off unlit: output OFF.

24 V supply → pigtail (tinned)
→ cable ♂ into pigtail ♀
→ cable ♀ into POWER ♂.

24 V, 6 A: Red → + Black → –

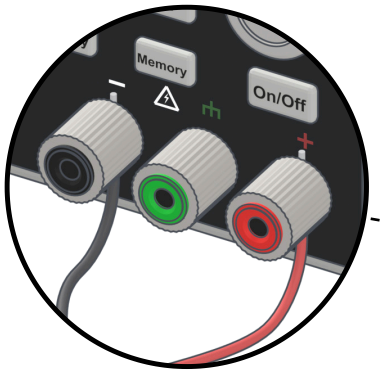

Tinned Tip through the Post: Red +, Black –

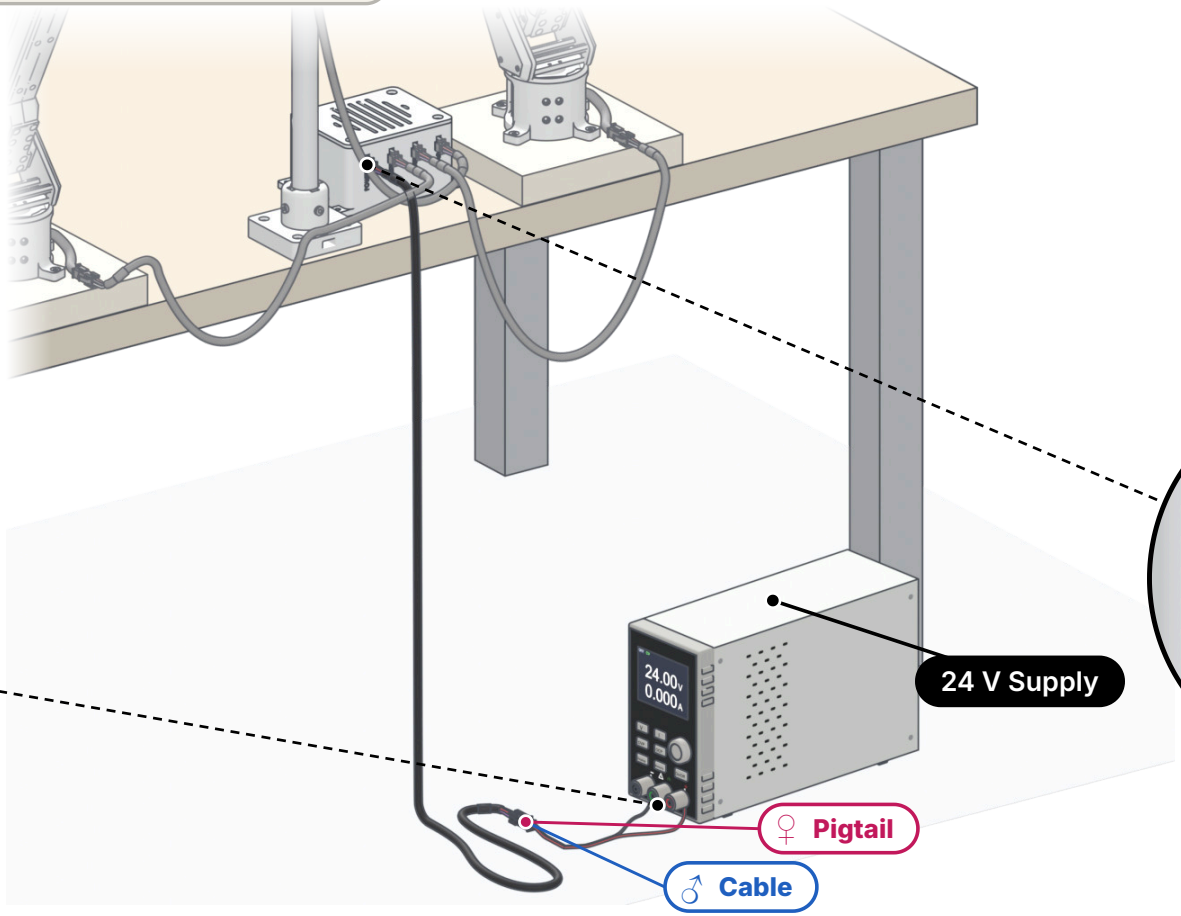

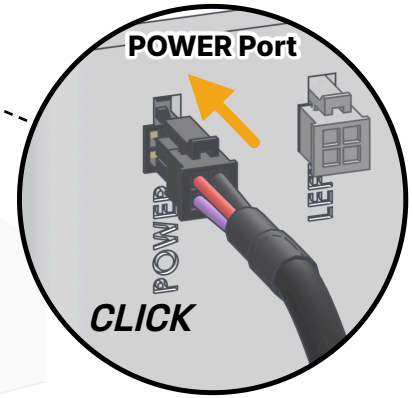

⚠ **Connect with the supply OFF. Do not switch it ON yet.**

⚠ **Always plug or unplug robot cables with the 24 V supply OFF.**

14

STEP 14 OF 21

Switch On 24 V

MAKIINA



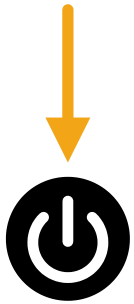

24 V ON

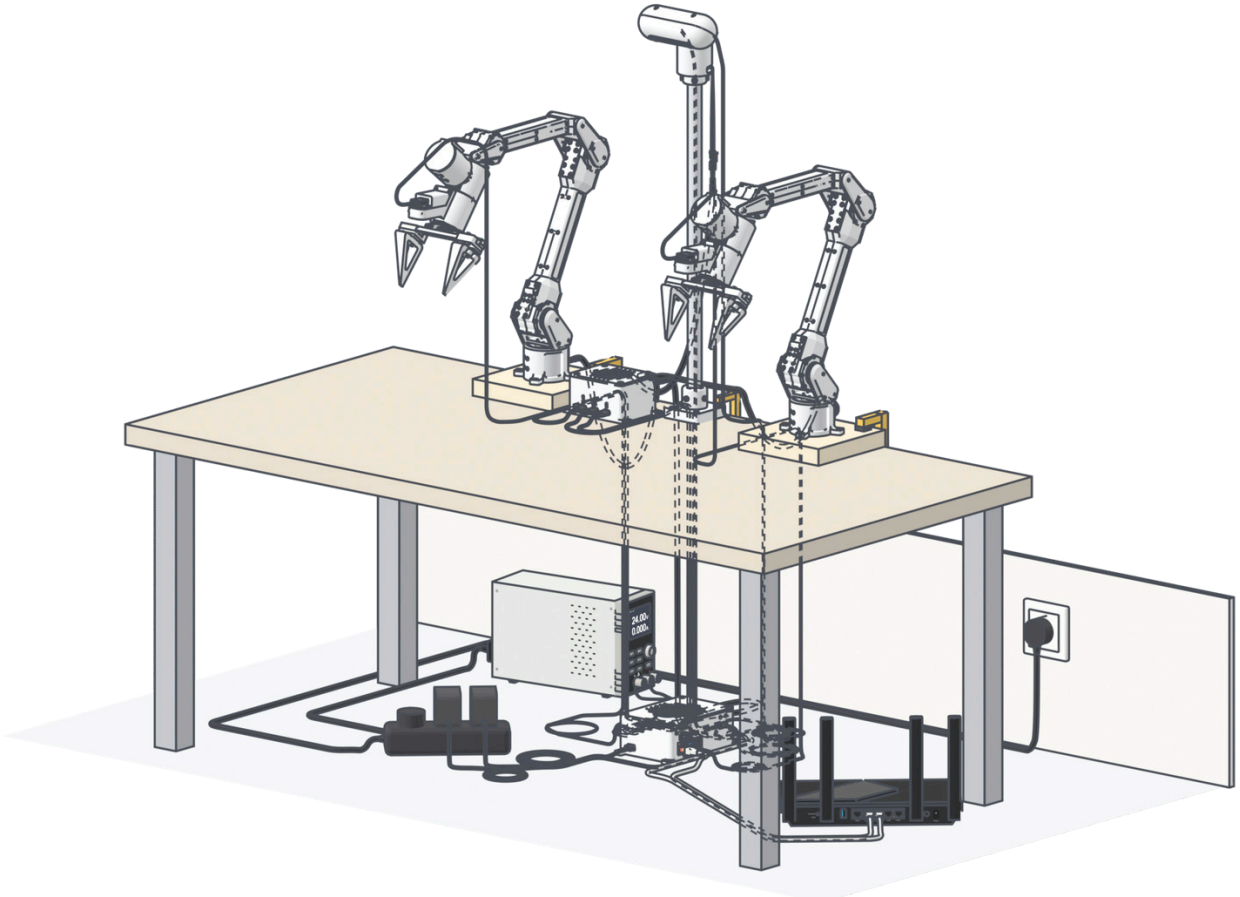

Press On/Off once (short press).
The 24 V output goes ON.

The Pis stay off until the next step.

⚠ **Keep clear of the arms' reach once powered.**

15

STEP 15 OF 21

Power the Pis

MAKIINA

2x



USB-C Supply

Plug one supply into each end of the Pi box. Plug both supplies into the power strip.

The Pis start by themselves.

Do this step last.
Plug or unplug HDMI only while the Pis are off.

Coil each spare supply cable next to the strip.

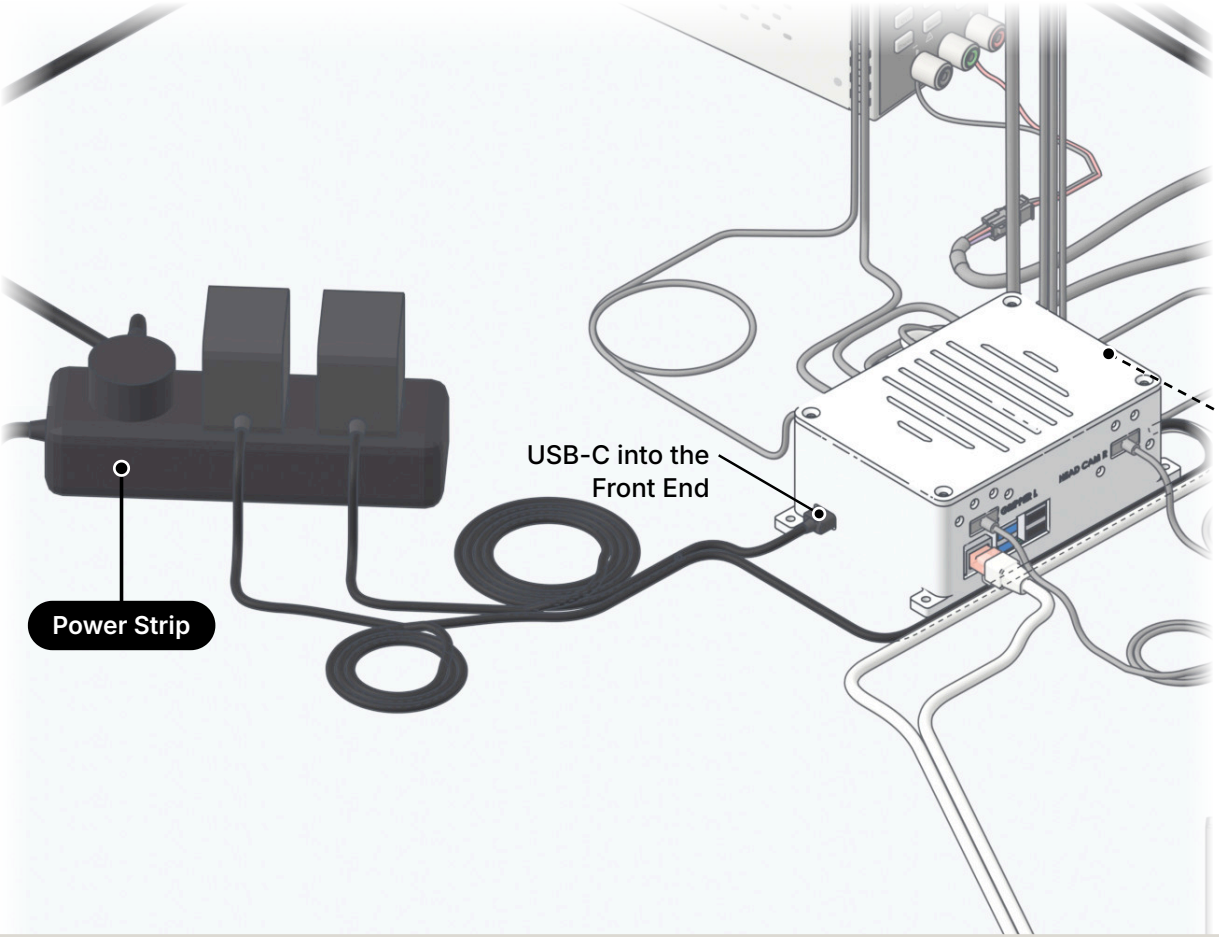

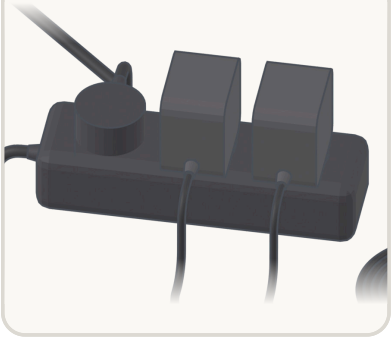

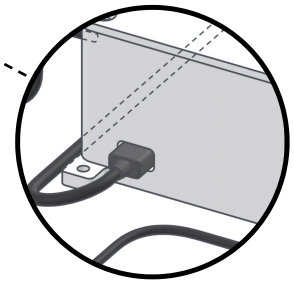

USB-C into the Rear End

Check: CAN Box Lights (One Set per Port, Seen through the Lid Slots)

- 🔴🟢🔵 Flickering: talking to the motors. Good.
- 🔴⚪⚪ Red only: no motor answers. 24 V ON? Cables clicked?
- 🔴🟢⚪ Steady red + green: ready, not in use yet.
- 🔴🟢🔵 All three steady: error. 24 V OFF, check cables, 24 V ON.

No light at all: that USB cable or the Pi box has no power.

16

STEP 16 OF 21

Connect from the Robot Console

MAKIINA

1. **Download the MAKIINA SDK**
   from your MAKIINA account (SDK page). Unzip it.
2. **Run setup once (offline):**
   setup.bat or ./setup.sh
3. **Start the Robot Console:**
   RobotConsole.bat or ./robot_console.sh
4. **Choose Fleet and sign in**
   with your MAKIINA account.
5. **Pick your robot. It shows Idle.**
   Open the Control tab.
6. **Head not fully assembled?**
   Calibrate it first: step 17.
7. **Press ARM (Control tab).**
   Press STOP or Space to stop it.

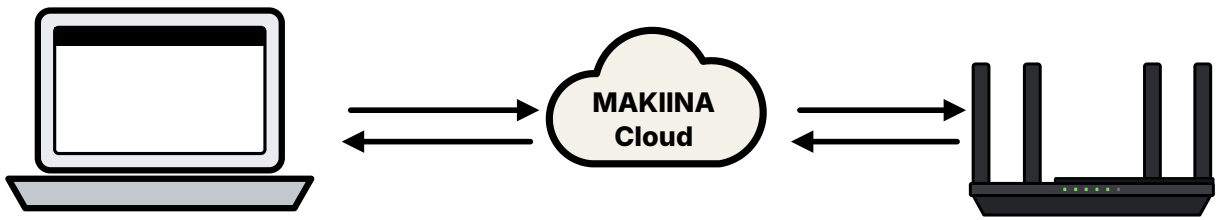

Your PC

Router: Internet + DHCP

Check on First Connect

- **No Red ROBOT INCOMPLETE Banner**
- **15 Joints (2 × (6 + Gripper) + Head)**
- **6 Video Streams**
  Head: 2 Fovea + 2 Context
  Grippers: 1 Each

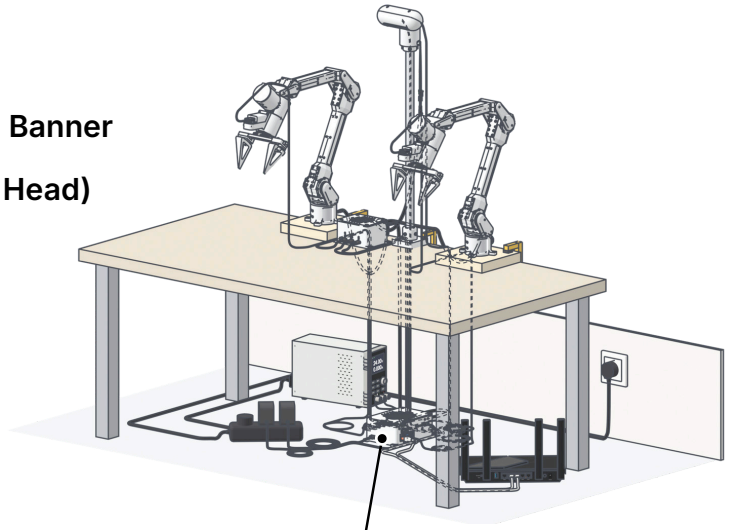

Both Pis on the Network (Ethernet)

Windows: the .bat files. Linux: the .sh files. The console opens at 127.0.0.1:8726.
Calibrate, Firmware and Software tabs only work when your PC is on the robot's network.
Head turned by hand with the 24 V OFF? Calibrate it (step 17).
Something missing? See "If Something's Wrong" at the end.

Nothing moves until you press ARM (or send a first command).

17

STEP 17 OF 21

Calibrate the Head

MAKIINA

Needed only if the head did not come fully assembled, or was turned by hand with the 24 V OFF.

1. **24 V OFF. Turn the head by hand**
   straight ahead, cameras toward the arms.
2. **24 V ON. The head holds there:**
   that pose becomes its zero.
3. **In the Robot Console, open the Calibrate tab.**
   Put your PC on the robot's network. Disconnect any session.
4. **Open the wizard, choose Head.**
   Boards: it finds the head's board.
5. **Identify: press Nudge.**
   The head turns a little and back. Pick head yaw.
6. **Direction: leave the sign as it is.**
   Press Next.
7. **Press Zero now, then Store on the boards.**
   Close the wizard.

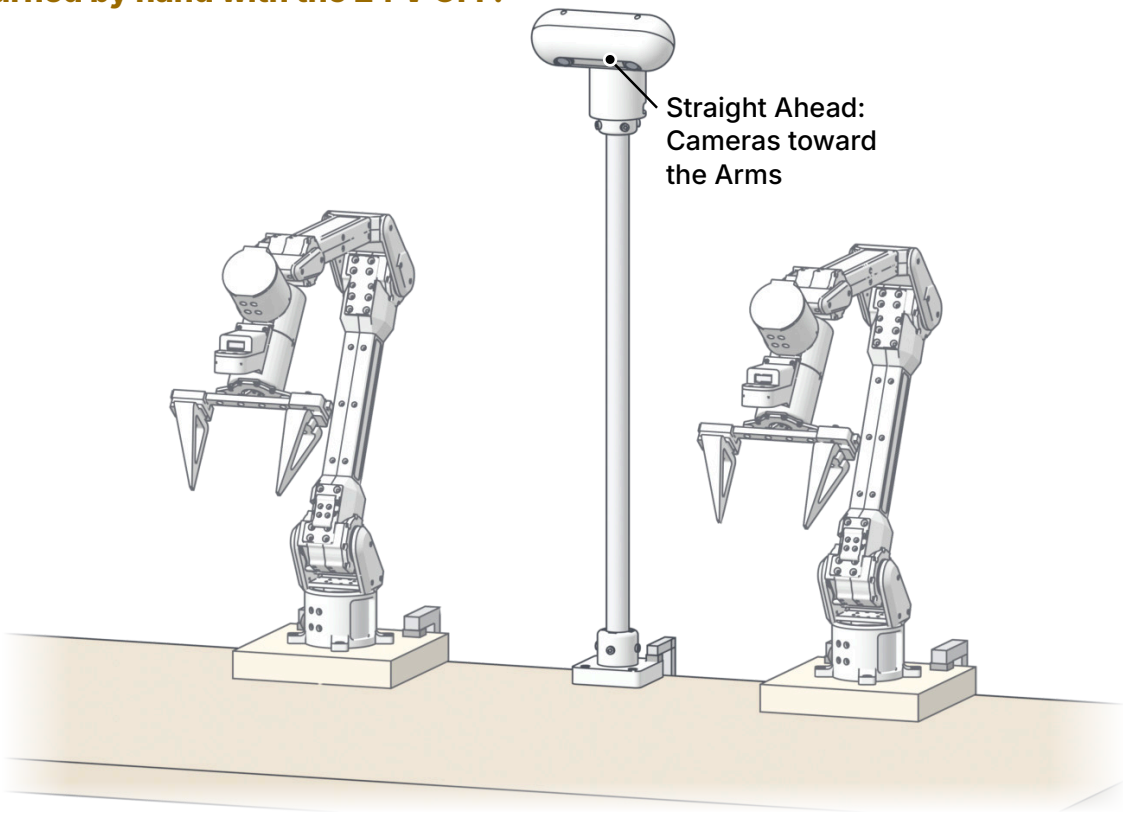

Seen from the front: the cameras look at you, over the arms' work area.

Unit › Boards › Identify › Direction › Zero › Store

The wizard's steps, as the console shows them. Unit: Head.

⚠ **Only the Robot Console calibrates the head. Keep clear: Nudge turns it.**

18

STEP 18 OF 21

Robot Console over USB

MAKIINA

1. **Unplug the 3 USB-A ends**
   from the Pi box.
   Pull them up onto the table.

2. **Plug them into your PC.**
   Coil each spare.
   Windows, first time:
   install the SDK's CAN driver.

3. **Start the Robot Console →**
   choose On this PC.

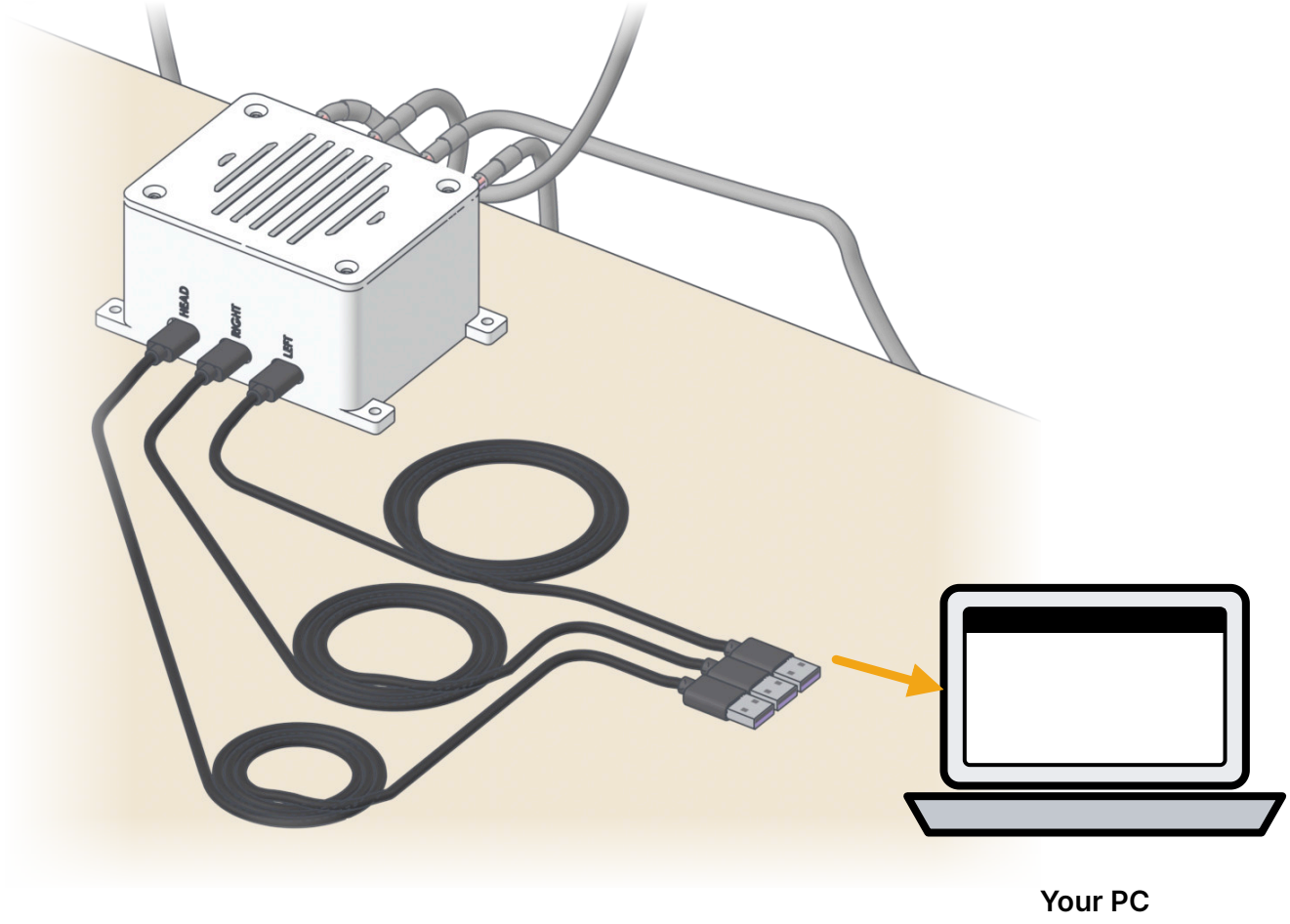

Arms and head only:
no cameras in this mode.

Plug the cables back into the Pi box for cloud use, over the rear edge as in step 10.

You can move them while the robot is powered.

No internet needed: the robot runs from your PC over the CAN box USB cables.

19 Program It: Python API

MAKIINA

Log In Once, with the SDK's Python

```
.venv/bin/python -m makiina.cloud.makiina_cli login you@company.com
  # Windows: .venv\Scripts\python; the SDK's setup installed the API there
```

Connect

```
import makiina.robot

robot = makiina.robot.Robot.connect()  # your robot, through MAKIINA Cloud
robot.safety.set_torque_fraction(0.3)
robot.safety.set_max_joint_velocity(0.5)  # rad/s

frames = robot.sensors.get_camera_frames()  # {stream: HxWx3 RGB}
joints = robot.sensors.get_joints()
robot.control.set_head(0.2)  # head yaw, rad, absolute: 0 = ahead
robot.control.set_ee_triggers({"right": 0.6})  # gripper: 0 open, 1 closed
robot.control.stop()  # hold, motors stay on

robot.safety.torque_off()  # 0 current: arms go limp
robot.disconnect()
```

Other Ways In

`Robot.connect("name")`
Connects by name, if you have several robots.

`Robot.connect_local()`
Connects over USB, as in step 18. No cameras.

Safety

Nothing moves before the first command.
Joints you do not command hold still.
If your program dies or loses the link,
the robot stops by itself after 30 s.

Full reference: docs/api.md in the SDK folder.

20

STEP 20 OF 21

Emergency Stop

MAKIINA

Two Ways to Stop the Robot at Once:

1 STOP in the Robot Console

STOP or Space

(Console Window in Front)

Motion stops at once.
The arms hold where they are: the motors stay on.

From Python:

```
robot.control.stop()
```

If your Python program dies or loses the link,
the robot stops by itself after 30 s.

2 Switch Off the 24 V Supply

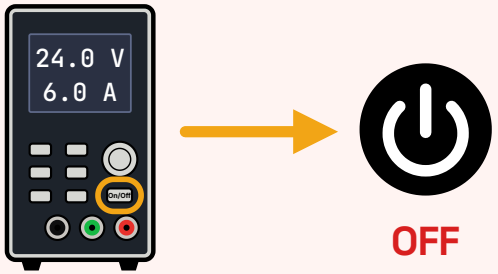

Cuts power to every motor at once.
The arms go limp and drop:
keep hands and objects clear of the arms.

⚠ **There is no separate emergency-stop button in the kit.**
Keep the 24 V supply's switch within reach whenever the robot moves.

Use STOP first when you can: the arms stay up. Switch off the supply when STOP is not enough or not reachable.

21

STEP 21 OF 21

Leaving the Robot

MAKIINA

Leaving it for a while? Choose one:

Torque off (0 Current)

Console: Torque off. Python:
`robot.safety.torque_off()`

The arms go limp: support them first.

Power Everything Off

24 V supply OFF, then unplug the
two USB-C supplies of the Pi box.

Same as torque off: the arms go limp.

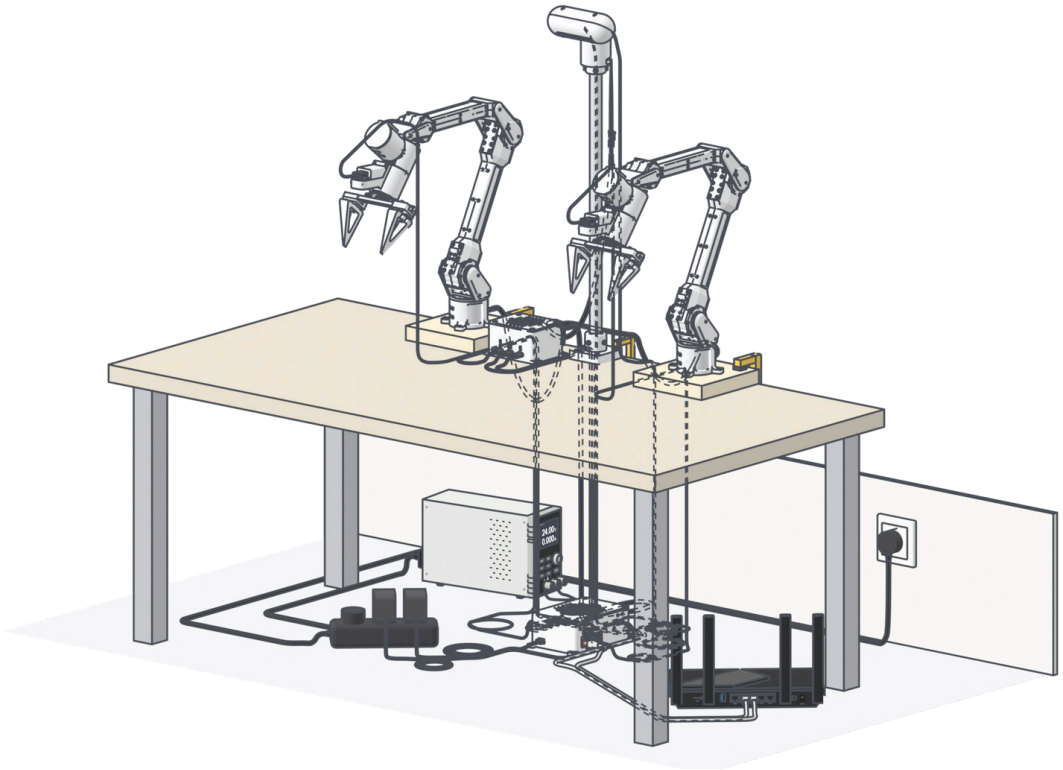

STOP holds the arms in place: the motors stay powered.

If Something's Wrong

MAKIINA

Switch the 24 V supply OFF before you touch any robot cable.

The Robot Is Not Listed, or Not Idle	Both USB-C supplies in the Pi box? Both Ethernet cables in? Router online? Give the Pis 2 minutes after power-on.
ROBOT INCOMPLETE, or Joints Missing	24 V supply ON (step 14)? Each Micro-Fit clicked at both ends (steps 7–9, 13)? 3 USB cables from the CAN box to the HEAD Pi plugged in (step 10)? Check the CAN box lights (step 15).
CAN Box Lights All Steady	Stopped after an error: 24 V OFF, check the robot cables, 24 V ON.
A Camera Stream Is Missing	Turn the Pis off. Unplug and replug the HDMI at the camera. Then do it again at the Pi box port with the same name. Pi box: HDMI side up at the L ports, HDMI side down at the R ports. Push it in all the way, until its black part is inside the box. Gripper camera: white ribbon pushed fully into both boards?
The Arms Are Limp	24 V OFF or torque off? Turn the 24 V or torque back on, then press ARM.
The Head Looks the Wrong Way	24 V OFF. Turn the head straight ahead by hand. 24 V ON, then calibrate it (step 17).
The Supply Limits Current, or the Voltage Drops	Supply OFF at once. Red on +, black on –? Supply set to 24.0 V and 6.0 A?